TERMINAL ENCLOSURE for Heavy Duty Snap Action Switches No. 30-8000

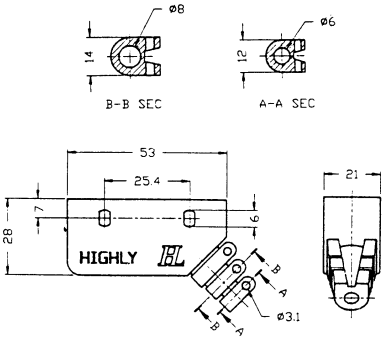

MOUNTING HOLES for Heavy Duty Snap Action Switches

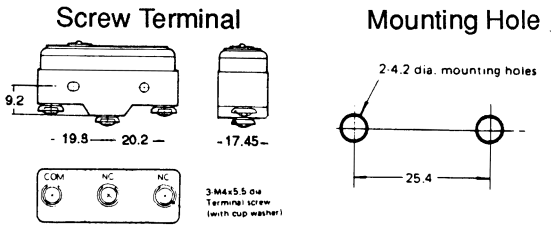

HEAVY DUTY SNAP ACTION SWITCHES with PIN PLUNGER

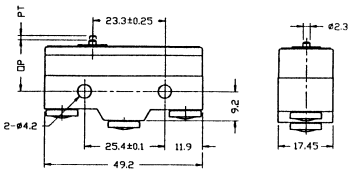

SPECIFICATIONS:

Current Rating:	15A @ 125/250V AC 1/2A @ 125V DC, 1/4 HP @ 250V DC 1/8 HP @ 125V AC, 1/4 HP @ 250V AC
Initial Contact Resistance:	15 Meg ohm (Max.)
Insulation Resistance:	500V DC 1000 Meg ohm (Min.)
Dielectric Strength:	1000V AC for 1 Minute
Contact Material:	Silver
Terminal Material:	Brass - Silver Plate
Terminal Type:	Screw

Part No.		Type	Action	Actuator
30-1300		SPDT	Snap Action Momentary	Pin Plunger
30-18144		SPDT	Snap Action Momentary	Extended Pin Plunger (14mm H.)

SPECIFICATIONS:

Terminal:	Screw	**OT Min.:**	0.13mm
OF Max.:	250-350g	**MD Max.:**	0.05mm
RF Min.:	114g	**OP:**	5.9 ± 0.4mm
PT Max.:	0.4mm		

HEAVY DUTY SNAP ACTION SWITCH with PLUNGER

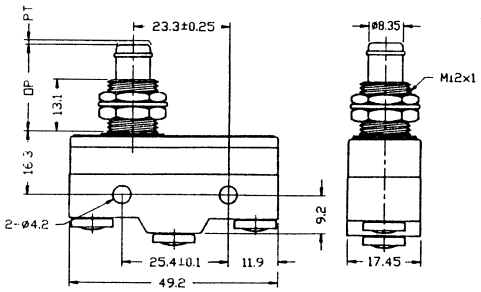

SPECIFICATIONS:

Current Rating:	15A @ 125/250V AC 1/2A @ 125V DC, 1/4 HP @ 250V DC 1/8 HP @ 125V AC, 1/4 HP @ 250V AC
Initial Contact Resistance:	15 Meg ohm (Max.)
Insulation Resistance:	500V DC 1000 Meg ohm (Min.)
Dielectric Strength:	1000V AC for 1 Minute
Contact Material:	Silver
Terminal Material:	Brass - Silver Plate
Terminal Type:	Screw

Part No.		Type	Action	Actuator
30-1307		SPDT	Snap Action Momentary	Plunger

SPECIFICATIONS:

Terminal:	Screw	**OT Min.:**	5.5mm
OF Max.:	250-350g	**MD Max.:**	0.05mm
RF Min.:	114g	**OP:**	21.8 ± 0.8mm
PT Max.:	0.4mm		

HEAVY DUTY SNAP ACTION SWITCH with ROLLER PLUNGER

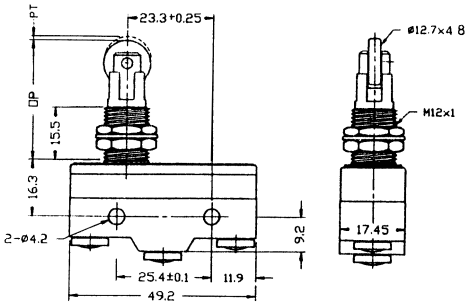

SPECIFICATIONS:

Current Rating:	15A @ 125/250V AC 1/2A @ 125V DC, 1/4 HP @ 250V DC 1/8 HP @ 125V AC, 1/4 HP @ 250V AC
Initial Contact Resistance:	15 Meg ohm (Max.)
Insulation Resistance:	500V DC 1000 Meg ohm (Min.)
Dielectric Strength:	1000V AC for 1 Minute
Contact Material:	Silver
Terminal Material:	Brass - Silver Plate
Terminal Type:	Screw

Part No.		Type	Action	Actuator
30-1308		SPDT	Snap Action Momentary	Roller Plunger

SPECIFICATIONS:

Terminal:	Screw	**OT Min.:**	3.58mm
OF Max.:	250-350g	**MD Max.:**	0.05mm
RF Min.:	114g	**OP:**	32.5 ± 1mm
PT Max.:	0.4mm		